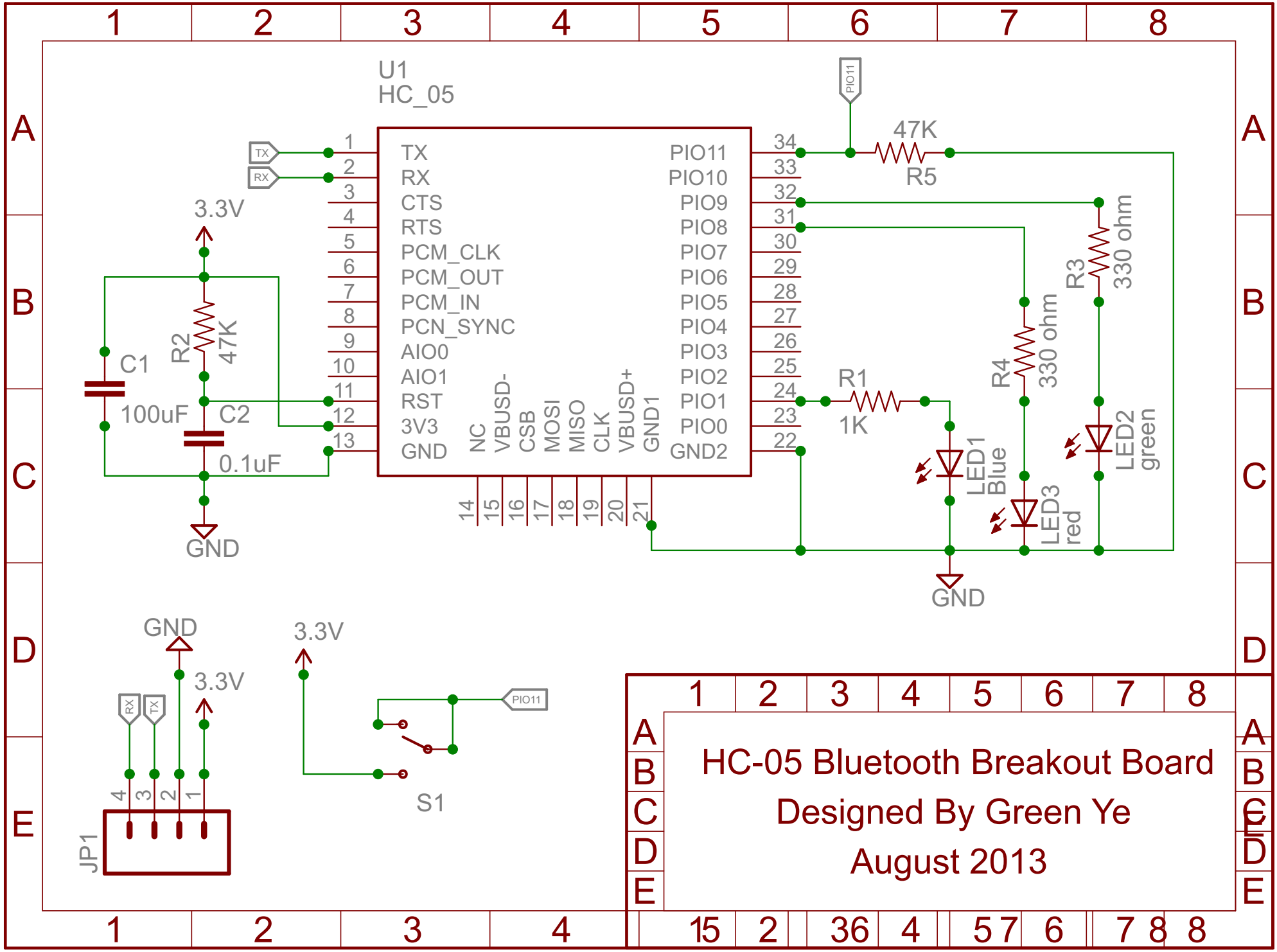
U1
HC_05
TX
RX
CTS
RTS
PCM_CLK
PCM_OUT
PCM_IN
PCN_SYNC
AIO0
AIO1
RST
3V3
GND
NC
VBUSD-
CSB
MOSI
MISO
CLK
VBUSD+
GND1
PIO11
PIO10
PIO9
PIO8
PIO7
PIO6
PIO5
PIO4
PIO3
PIO2
PIO1
PIO0
GND2
3.3V
C1
100uF
R2
47K
C2
0.1uF
GND
47K
R5
R1
1K
R4
330 ohm
R3
330 ohm
LED1
Blue
LED2
green
LED3
red
JP1
S1
HC-05 Bluetooth Breakout Board
Designed By Green Ye
August 2013